myappliances
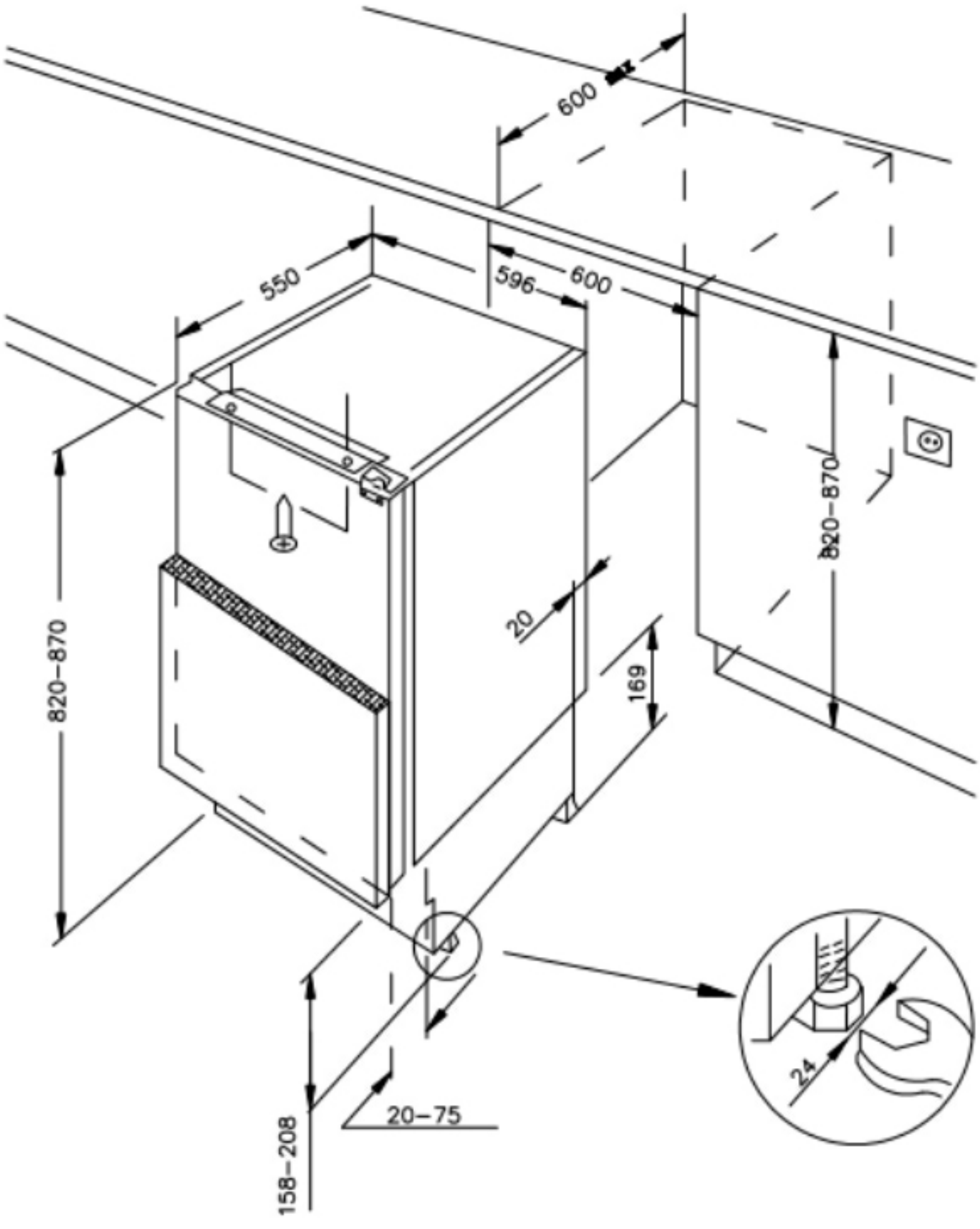
ART29401